FUNCH INDUSTRY CORPORATION

Address: No.11,Dong Shuijing Street,
Dongcheng District, Beijing, China
Tel: +86-10-58644407/58644417
Fax: +86-10-58644472
Email: sales@fcautoparts.com
Website: http://www.fcautoparts.com

FUNCH

FUNCH BEARINGS

FUNCH INDUSTRY CORPORATION

Introduction

Funch Industry Corporation is a specialized supplier of the industrial bearing, wheel bearing, wheel hub unit and automobile engine parts. We provide services for domestic & international OEM and aftermarket, and committed to providing customers with professional services and supply chain solutions for them.

Funch has many years of global service experience, we are quite familiar with European and North American market, and fully understand the customer's needs.

Our Company control management process and production chain in strict accordance with ISO9001 quality management system standard since it' s found, and passed the TS16949 quality system certification as well!

It owns the leading of heat treat production line and the most advanced production equipments, all kinds of high precision inspection instruments, and strong research and developing ability with groups of senior and experienced technical staff.

We win customers with high-quality products, and help our clients to achieve value-added with professional service, regard creating world-class brand products as our development strategy.

We would like to sincerely welcome both domestic and foreign customer in common progress and development. All our staffs devoted themselves to promoting Funch as a world influential international brand company!

PRODUCTS RANGE

Tapered Roller Bearing

Description

The main feature of these bearings is that the action line of the resulting load through the rollers forms an angle with the geometric axis of the bearing, which is why these bearings are especially suitable for supporting significant combined loads (in radial and axial directions).

Additionally, this design enables an authentic bearing movement without the rollers slipping on the tracks of the external and internal rings

Another very important variable in this type of bearing is the angle of the contact on the roller tracks, given that based on this, the axial and radial load relations of the application can be compensated (e.g. a greater angle, greater capacity for withstanding axial loads)..

Single-row tapered roller bearings are able to withstand high combined radial and axial loads. The axial loads are borne in only one sense and, in addition, the radial loads generate an induced axial load in the bearing. This induced load must be counteracted and therefore these bearings are arranged in opposing pairs, so that each one can be offset against the other.

These bearings are easy to disassemble. On the one hand, we have the external unit (ring) and on the other the inner unit (cone + cage + rollers)

Double-row tapered roller bearings are pre-adjusted units normally formed by two inner units and a double outer ring. Furthermore, they are usually greased and fitted with a set of seals preventing both the entrance of pollutants and the loss of grease.

The arrangement of the inner units allows the bearing to withstand large axial and radial loads in two directions and their axial capacity will depend on the angle of contact of the outer ring raceway

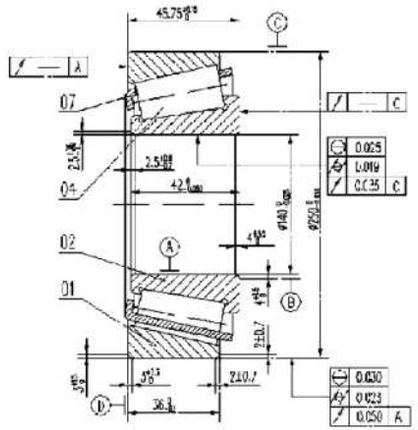

Structure

Both metric size and inch size are available
--single-row tapered roller bearing
--double-row tapered roller bearing with two outer ring
--double-row tapered roller bearing with two inner ring
--four-row tapered roller bearing
(TS.TSF.TDO.TDI.TNA.TNASW.TTC.TTSP.TDIE.TDIA.TQO.TQOE... SERIES)

Cage

Normally steel stamping cage:
We will replace steel-stamping cage by roller-pillar welding cage when diameter is more than 650mm

Application

Single-row:oil rig, pump, wheels of auto, machine spindle, shaft car vehicles,rolling mill,construction machinery, lifting equipment, printing machinery and all kinds of deceleration devices.

Double-row: the machine spindle, and rolling stock

Four-row: Rolling mill

Plummer block

Construction

.Split plummer block design allows for easy mounting and dismounting of pre-assembled shafts.

.Sealing options - we offers a range of sealing options including: FELT, ZF, TS, TSU, TSA, TAC, LS

TST,U-LOCK,TA,ASNA END PLATE

.Case end covers are available.

.Multi-relubrication points are provided to ensure relubrication of the bearing depending on orientation.

.Housing are supplied with spacer rings in order to provide axial location. Those can be omitted for "free end" axial front.

.The split Plummer block from LDK combines high quality material and design to maximize bearing performance

Application

The pillow block ball bearing is composed of a single row deep groove ball bearing with seals at both sides and spherical outside surface, and a housing, suitable for simple support, widely used in varieties of mechanical equipment , especially for agricultural , metallurgical , teatile and printing machinery.

Features

--Ideal casting design of high strength, rigid and light weight
--Precision machined bearing seat
--Multiple positioning of grease fittings
--Solid corners for locating rings
--Free surface for drain hole

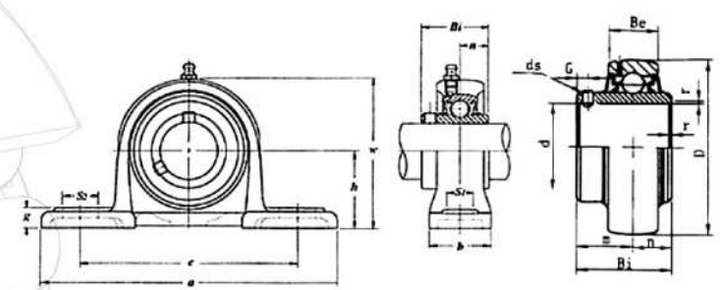

Cylindrical Roller Bearing

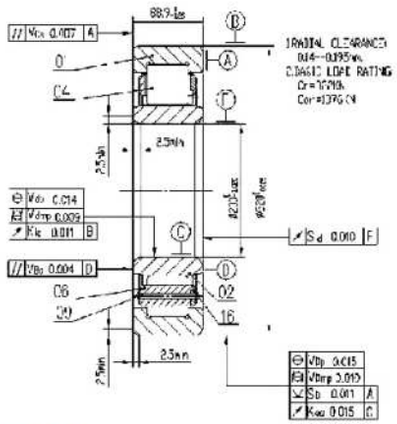

Description

Single row cylindrical roller bearings are radial bearings of whom are the most designs - with the exception of full complement cylindrical roller bearings - are separable

Their boundary dimensions are standardized by the DIN standards DIN standard plans and DIN 5412/part 1,respectively.

Due to the possibility of fitting the different components of the bearings, i.e the outer and the inner rings, individually the mounting becomes easier.

Furthermore, this technical feature allows for the use of press fits for both rings which is of advantage in applications where vibrations or shock loads occur.

Depending on their design, single row cylindrical roller bearings are ideal non-locating bearings, although various design variations can also handle thrust forces up to an certain amount in one or both directions.

In the case of bearing applications having limited space available (i.e gear boxes),single row cylindrical roller bearings can also be used without their respective outer or inner rings,

i.e., RN-type and RNU-type bearings, respectively

--Series NN30&NNU49 **double Row Cylindrical Roller Bearings**are separable radial bearings.

Their main dimensions are standardized by DIN5412/part 4.

They are used as non-locating bearings in bearing arrangements of machine tool spindles.

Therefore, these bearings are normally used in high precision tolerance class, frequently in combination with reduce internal clearance. These bearings also feature high radial load capacity and are satisfactory for high speed applications, providing a very stiff and rigid bearing arrangement. They are also commonly used with tapered bores, namely suffix k, (i.e.taper1:12)

Structure

Both metric size and inch size are available
Single-row cylindrical roller bearing N.NU.NJ.NUP.NF.NJ+HJ.type
Tow-row cylindrical Roller bearing NN.NNK.NU.NNU.type

Cage

Solid machine cage,
Stamping cage, nylon cage

Application

Oil pumps,air compressors,transmission system,printing machinery,electric motors,
gas turbines,machine spindle,rolling mill,bloomer

Features

--large rated load
--strong rigidity
--smoothly operation
--long life
--high limiting speed

Deep Groove Ball Bearing

Description

This kind of bearing is the most popular of all bearings. It has a simple design, cannot be separated and, in general, requires very little attention once it is fitted in the application.

Within single-row ball bearings, we can basically find 3 versions of the same bearing: open bearings, with protective plates and with shutter gaskets. The protective plates leave a small radial space separating it from the inner ring, while the shutter gaskets completely close the space between the inner and outer rings.

Deep groove ball bearing is usually composed of an outer ring,an inner ring,a row of steel balls and cage.it mainly carries radial loads,but it can also carry a small amount of axial loads.Axial carrying capacity will increase when selecting large radial clearance.the contact angle is zero when bear only radial force;the contact angle will more than zero when axial force is acted.

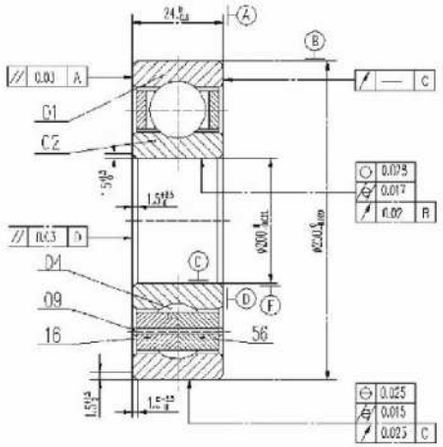

Structure

-RS.-2RS.-Z.-2Z.OPEN.ECT.

6000 series	61800 series
6200 series	61900 series
6300 series	61700 series
6400 series	16000 series

Miniature/inch R series

Features

--low friction
--high limiting speed
--simple structure
--cost saving

Cage

Stamping wave-shaped cage;
Solid brass cage;
Nylon cage;

Application

Gearbox, instruments, motor, household appliances, Internal-combustion engine, transport vehicles, agricultural machinery, construction machinery and engineering machinery, etc.

Angular Contact Ball Bearing

Description

Angular contact ball bearing can bear radial and axial load simultaneously, and work in high speed. The bigger the contact angle, the higher the load capacity. Bearing with high precision and speed usually take 15 contact angle. In axial force, the contact angle will increase.

Structure

Single-row angular contact ball bearing

Double-row angular contact ball bearing

--7000C type (α= 15°)

--7000AC type (α= 25°)

--7000B type (α= 40°)

--QJ four-point angular contact ball bearing

Cage

Brass cage or synthetic resin cage

Application

Single-row angular contact ball bearing Spindle of lathe, motor with high frequence,

gas turbine, centrifugal machine, front wheel of small auto, differential gear shaft

Two-row angular contact ball bearing oil pump, roots blower, air compressor, all kinds of gear box, fuel injection pump, printing machinery.

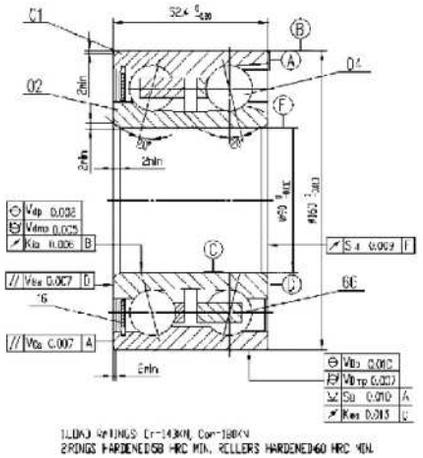

Self-aligning Ball Bearing

Description

Double row self-aligning ball bearings have a sphere raceway in the outer ring and a double raceway in the inner ring. This feature gives the bearings their self-aligning property, permitting angular misalignment of the shaft relative to the housing. They are therefore particularly suitable for applications where misalignment can arise from errors in mounting or from shaft deflection.

Structure

1200.1300.2200.2300 series

This bearing is mainly used in the transmission axles of wood processing machines and textile machines.

Cage

Brass cage or synthetic resin cage

Application

Single-row angular contact ball bearing Spindle of lathe, motor with high frequence,

gas turbine, centrifugal machine, front wheel of small auto, differential gear shaft

Two-row angular contact ball bearing oil pump, roots blower, air compressor, all kinds of gear box, fuel injection pump, printing machinery.

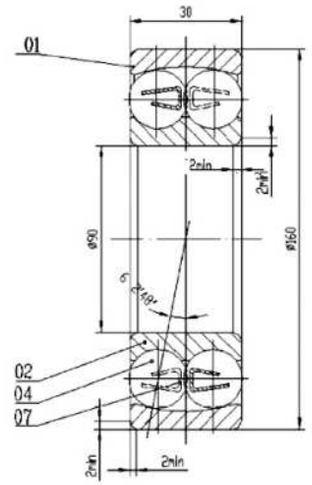

Spherical Plain Bearing

Description

Spherical plain bearings have an inner ring with a sphere convex outside surface and an outer ring with a correspondingly sphered out concave inside surface. The design makes them particularly suitable for bearing arrangements where alignment movements between shaft and housing have to be accommodated, or where oscillating or recurrent tilting or slewing movements must be permitted at relatively slow sliding speeds.

Structure

Maintenance type GE... E series

Maintain-free type GE...C series

Features

--high precision

--long life and low noise

--self-lubricating

--can bear large load

Application

Spherical plain bearings widely used to the hydraulic oil tank, forging press machine, construction machinery and automation equipment, the vibration damper, and water conservancy machinery industries. Spherical plain bearings have a big load carrying capacity and impact resistance. According to different structures and types, Spherical plain bearings can bear radial load, axial load and combined load.

Spherical roller bearing

Description

Spherical roller bearing can be submitted to high radial load and some axial load. The outer raceway is spherical and have the feature of self-alignment, when the shaft is forc0ed to bending and angle of the inner ring and outer ring's central lines is less than 1°-2° 30',the bearing can working as normal.

Structure

–Cylinder bore spherical roller bearing (20000W33 type)
–Tapered bore spherical roller bearing (20000K/W33 type)
–Spherical roller bearing mounted on adaptor sleeve (20000K+H0000 type)
22200 series 23100 series 23800 series
22300 series 24000 series 23900 series
23000 series 24100 series 24800 series
23200 series 24200 series 24900 series

Cage

Solid machine brass cage;
Pressed steel or brass;
CA. C. CC. CAC. EAC. CAK. CACK. EACK. MB. MBK. E. types;

Features

–large rated load
–strong rigidity
–Smoothly operation
–long life
–high limiting speed

Application

Mainly used in the position that the easily bended and processing installation with larger errors, woodworking machinery, transmission shaft of textile machinery, aligning bearings with socket sleeve of pulley vertical type.
Besides, we can provide specially designed/enhanced spherical roller bearing for the mining & quarry machinery, such as vibrating screen and cone crusher.

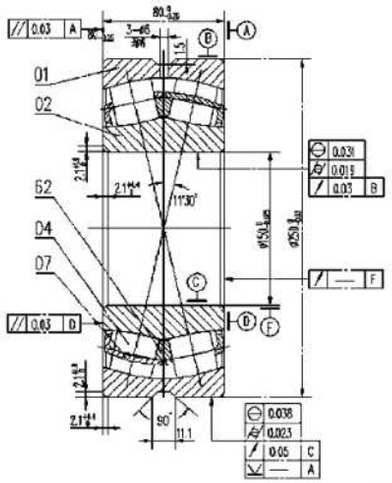

Hub combination bearing

Application

Heavy commercial vehicle wheel, Metallurgy industry and Mining industry.

Bearing No. such as: BTH 0018

CONTENTS

Tapered roller bearings >10–15
Plummer Block >16–17
Cylindrical roller bearings >18–23
Deep Groove Ball Bearing >24–27
Angular Contact Ball Bearing >28–30
Self–aligning Ball Bearing >31
Spherical plain bearings >32
Spherical roller bearings >33–35

Tapered roller bearings

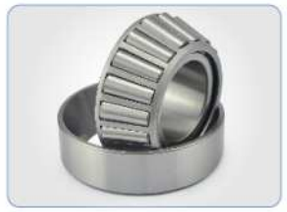

Category: Single - row metric size

Bearing No.	Inner diameter d [mm]	Outer diameter d [mm]	Height B, T, H [mm]
30202A	115	35	11.75
30302A	15	42	14.25
30203A	17	40	13.25
32303A	17	47	20.25
30303A	17	47	15.25
32004X	20	42	15
30204A	20	47	15.25
32304A	20	52	22.25
30304A	20	52	16.25
32005X	25	47	15
33205A	25	52	22
32205A	25	52	19.25
30205A	25	52	16.25
32305A	25	62	25.25
31305A	25	62	18.25
30305A	25	62	18.25
32006XA	30	55	17
33206A	30	62	25
32206A	30	62	21.25
30206XA	30	62	17.25
30206A	30	62	17.25
31306A	30	72	20.75
32306A	30	72	28.75
30306A	30	72	20.75
32007XA	35	62	18
33207A	35	72	28

Bearing No.	Inner diameter d [mm]	Outer diameter d [mm]	Height B, T, H [mm]
32207A	35	72	24.25
30207A	35	72	18.25
31307A	35	80	22.75
32307A	35	80	32.75
30307A	35	80	22.75
32008XA	40	68	19
32008X	40	68	19
33208A	40	80	32
32208A	40	80	24.75
30208A	40	80	19.75
31308A	40	90	25.25
32308B	40	90	35.25
32308A	40	90	35.25
30308A	40	90	25.25
32009XA	45	75	20
32009A	45	75	20
33209A	45	85	32
33209X	45	85	32
32209A	45	85	24.75
30209XA	45	85	20.75
32309B	45	100	38.25
31309A	45	100	27.25
32309A	45	100	38.25
30309A	45	100	27.25
33010A	50	80	24
32010X	50	80	20
33110A	50	85	26
33210A	50	90	32
32210A	50	90	24.75
30210A	50	90	21.75
31310A	50	110	29.25
32310B	50	110	42.25
32310AX1	50	110	42.25
30310A	50	110	29.25
32011X	55	90	23

Bearing No.	Inner diameter d [mm]	Outer diameter d [mm]	Height B, T, H [mm]
32011A	55	90	23
32211A	55	100	26.75
30211A	55	100	22.75
33211A	55	100	35
31311A	55	120	31.5
30311A	55	120	31.5
32311A	55	120	45.5
32311B	55	120	45.5
32012X	60	95	23
33112A	60	100	30
33212A	60	110	38
32212A	60	110	29.75
30212A	60	110	23.75
31312A	60	130	33.5
32312A	60	130	48.5
30312A	60	130	33.5
32013X	65	100	23
33113A	65	110	34
33213A	65	120	41
32213A	65	120	32.75
30213A	65	120	24.75
30313A	65	140	36
31313A	65	140	36
32313A	65	140	51
32014X	70	110	25
33014A	70	110	31
30214A	70	125	26.25
32214A	70	125	33.25
30314A	70	150	38
32314A	70	150	54
31314A	70	150	38
32015X	75	115	25
30215A	75	130	27.25
32215A	75	130	33.25
33215A	75	130	41

Bearing No.	Inner diameter d [mm]	Outer diameter d [mm]	Height B, T, H [mm]
30315A	75	160	40
32315A	75	160	58
31315A	75	160	40
32016X	80	125	29
33116A	80	130	37
30216A	80	140	28.25
32216A	80	140	35.25
33216A	80	140	46
30316A	80	170	42.5
32316A	80	170	61.5
32017X	85	130	29
33117A	85	140	41
33217A	85	150	49
30217A	85	150	30.5
32217A	85	150	38.5
30317A	85	180	44.5
32317A	85	180	63.5
32018X	90	140	32
33118A	90	150	45
30218A	90	160	32.5
32218A	90	160	42.5
30318A	90	190	46.5
32318A	90	190	67.5
32019X	95	145	32
33019A	95	145	39
30219A	95	170	34.5
32219A	95	170	45.5
33219A	95	170	58
30319A	95	200	49.5
32319A	95	200	71.5
33020A	100	150	39
302202A	100	180	37
32220A	100	180	49
30320A	100	215	51.5
32320A	100	215	77.5

Bearing No.	Inner diameter d [mm]	Outer diameter d [mm]	Height B, T, H [mm]
32021X	105	160	35
33021X	105	160	43
30221A	105	190	39
32221A	105	190	53
30321A	105	225	53.5
32321A	105	225	81.5
32022X	110	170	38
33022A	110	170	47
33122A	110	180	56
30222A	110	200	41
32222A	110	200	56
30322A	110	240	54.5
32322A	110	240	84.5
32024X	120	180	38
30224A	120	215	43.5
32224A	120	215	61.5
30324A	120	260	59.5
32324	120	260	90.5
32026A	130	200	45
30226A	130	230	43.75
32226A	130	230	67.75
32928	140	190	32
30228A	140	250	45.75
32228A	140	250	71.75
32328FD	140	300	107.75
32930	150	210	38
30230A	150	270	49
32230A	150	270	77
32232P6X	160	290	84
32934	170	230	32
32234A	170	310	91
32236	180	320	91
32038XP6X	190	290	64
32238A	190	340	97
32940A	200	280	51

Category: Special and inch size

Symbol	Inner diameter d [mm]	Outer diameter d [mm]	Height B, T, H [mm]
LM 11749/LM11710 /K-LM 11749/K-LM 11710	17.462	39.878	13.483
CBK 087/K-LM 11949/K-LM 11910	19.05	45.237	15.494
M 12649/M 12610/K-M 12649/K-M 12610	21.43	50.005	17.526
LM 12749/LM 12710/K-LM 12749/KL-M 12710	21.987	45.237	15.494
513-720/K-L44643/K-L 44610	25.4	50.292	14.224
CBK 247/K-M 84249 / K-M 84210	25.4	59.53	23.368
L 44649/L 44610/K-L 44649/K-L 44610	26.988	50.292	14.224
L 45449/L 45410/L-45449/L45410	29	50.292	14.224
CBK 248/K-M86649/K-M 86610	30.162	64.292	21.433
CBK 088/K-LM 67048/L-LM 67010	31.75	59.131	15.875
15123/15245/K-15123/K-15245	31.75	62	18.161
14125A/14276/K-14125A/K-14276	31.75	69.012	19.845
CBK 093/K-HM 99443/K-HM 89410	33.338	76.2	29.37
CBK 333/K-LM 48548/K-LM 48510	34.925	65.088	18.034
CBK 348/K-14137A/K-14276	34.925	69.012	19.945
HM 88649/88610/HM 88649/88610	34.925	72.234	25.4
CBK 350/K-25877/K-25820	34.925	73.025	23.812
CBK 094/K-HM 89446/K-HM 89410	34.925	76.2	29.37
513-719/K-L-68149/K-L 68111	34.988	59.974	15.875
JL 68145/JL 68111 Z/K-JL 68145/K-JL 68111	35	60	15.875
JL 69349/JL 69310/JL 69349/JL 69310	38	63	17
513-716A/K-JL 69349A/K-JL69399	38	63	17.1
LM 29749/LM 29710/LM 29749/LM 29710	38.1	65.088	18.034
LM 501349/LM 501310/K-LM 501349/K-LM 501310	41.275	73.431	19.558
CBK 387/K-M 802048/K-M 802011	41.275	82.55	26.543
HM 807035/807010/HM 807035/807010	41.275	104.775	36.512
25580/25520/K-25580/K-25520	44.45	82.931	23.813
HM 803149/HM 803110/HM 803149/HM 803110	44.45	88.9	30.162
CBK 327/K-33885/K-33822	44.45	95.25	27.783
CBK 334/K-HM 903249/K-HM 903210	44.45	95.25	30.958
CBK 349/K-25590/K-25520	45.618	82.931	23.812
CBK 331A/K-LM 503349/K-LM 503310	45.987	74.976	18
CBK 351/K-386A/K-382A	47.625	96.838	21
396A/394A/396A/394A	50	110	22
CBK 322/K-33889/K33822	50.8	95.25	27.783

Plummer block

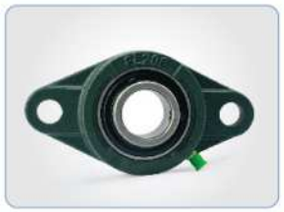

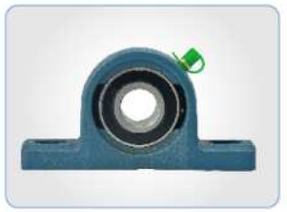

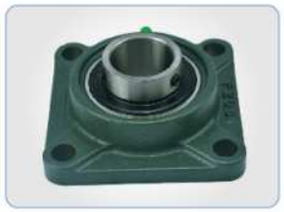

Bearing No.	Dimensions d [mm]	Dimensions h [mm]	Dimensions b [mm]	Dimensions t [mm]	Dimensions B [mm]
UCP201	12	30.2	38	44.5	31
UCP202	15	30.2	38	44.5	31
UCP204	20	33.3	38	48	34.1
UCP205	25	36.5	38	48	34.1
UCP206	30	42.9	48	53	38.1
UCP207	35	47.6	48	59.5	42.9
UCP208	40	49.2	54	69	49.2
UCP209	45	54	54	69	49.2
UCP210	50	57.2	60	74.5	51.6
UCP211	55	63.5	60	76	55.6
UCP212	60	69.8	70	89	65.1
UCP213	65	76.2	70	89	65.1
UCF201	12	86	12	31	12.7
UCF202	15	86	12	31	12.7
UCF204	20	86	12	34.1	14.3
UCF205	25	95	14	34.1	14.3
UCF206	30	108	14	38.1	15.9
UCF207	35	117	16	42.9	17.5
UCF208	40	130	16	49.2	19
UCF209	45	137	18	49.2	19
UCF210	50	143	18	51.6	19
UCF211	55	162	20	55.6	22.2
UCF212	60	175	20	65.1	25.4
UCF213	65	187	22	65.1	25.4
UCF214	70	193	22	74.6	30.2
UCF215	75	200	22	77.8	33.3

Bearing No.	Dimensions d [mm]	Dimensions h [mm]	Dimensions b [mm]	Dimensions t [mm]	Dimensions B [mm]
UCF216	80	208	22	82.6	33.3
UCF217	85	220	24	85.7	34.1
UCF218	90	235	24	96	39.7
UCT201	12	16	32	89	94
UCT205	25	16	32	89	97
UCT206	30	16	37	102	113
UCT207	35	16	37	102	129
UCT208	40	19	49	114	144
UCT209	45	19	49	117	144
UCT210	50	19	49	117	149
UCT211	55	25	64	146	171
UCT212	60	32	64	146	194
UCT213	65	32	70	167	224
UCT214	70	32	70	167	224
UCT215	75	32	70	167	232
UCT216	80	32	70	184	235
UCT217	85	38	73	198	260
UCPA201	12	30.2	40	12.7	M10
UCPA205	25	36.5	38	14.3	M10
UCPA206	30	42.9	50	15.9	M14
UCPA207	35	47.6	55	17.5	M14
UCPA208	40	49.2	58	19	M14
UCPA209	45	54.2	60	19	M14
UCPA210	50	57.2	64	19	M16
UCPA211	55	63.5	66	22.2	M16
UCPA212	60	69.9	68	25.4	M16
UCPA213	65	76.2	70	25.4	M16
UCFC201	12	100	10	62	28.3
UCFC202	15	100	10	62	28.3
UCFC205	25	115	10	70	29.8
UCFC206	30	125	10	80	32.2
UCFC207	35	135	11	90	36.4
UCFC208	40	145	11	100	41.2
UCFC209	45	160	10	105	40.2
UCFC210	50	165	10	110	42.6

Cylindrical roller bearings

Bearing No.	Inner diameter d [mm]	Outer diameter d [mm]	Height B, T, H [mm]
NJ202ETNT	15	35	11
NUP202E	15	35	11
NJ202E	15	35	11
NU202E	15	35	11
N202E	15	35	11
NJ203E TNT	17	40	12
NJ203E	17	40	12
NUP204E	20	47	14
NJ204E	20	47	14
NU204E	20	47	14
N204E	20	47	14
CBK-497 *	22	47	18
NUP2205	25	52	18
NJ2205M	25	52	18
NUP205E	25	52	15
NU205E	25	52	15
NJ205E	25	52	15
N205E	25	52	15
NU2305EM	25	62	24
NUP305E	25	62	17
NJ305E	25	62	17
NU305E	25	62	17
N305E	25	62	17
CBK-239 *	30	61.935	19.05
NUP2206EM	30	62	20
NUP206E	30	62	16

Bearing No.	Inner diameter d [mm]	Outer diameter d [mm]	Height B, T, H [mm]
NU206E	30	62	16
NJ206E	30	62	16
N206E	30	62	16
NUP306E	30	72	19
NJ306E	30	72	19
NU306E	30	72	19
N306E	30	72	19
NJ2207E	35	72	23
NUP207E	35	72	17
NJ207E	35	72	17
N207E	35	72	17
NU207E	35	72	17
NUP307E	35	80	21
NJ307E	35	80	21
NU307E	35	80	21
N307E	35	80	21
NJ2208E	40	80	23
NUP208E	40	80	18
NJ208E	40	80	18
N208E	40	80	18
NUP308E	40	90	23
NJ308E	40	90	23
N308E	40	90	23
NU308E	40	90	23
NJ2308E	40	90	33
NUP408E	40	110	27
NJ2209E	45	85	23
NUP209E	45	85	19
NJ209E	45	85	19
N209E	45	85	19
NU209E	45	85	19
NUP309E	45	100	25
NF309E	45	100	25
NJ309E	45	100	25
NU309E	45	100	25

Bearing No.	Inner diameter d [mm]	Outer diameter d [mm]	Height B, T, H [mm]
N309E	45	100	25
NJ2309E	45	100	36
CBK-238 *	49.93	80	15
NU1010M	50	80	16
NU2210E	50	90	23
NJ2210EM	50	90	23
NUP210E	50	90	20
NJ210E	50	90	20
N210E	50	90	20
NU210E	50	90	20
NUP310E	50	110	27
NU310E	50	110	27
NJ310E	50	110	27
N310E	50	110	27
NJ2211EM	55	100	25
NUP211E	55	100	21
NU211E	55	100	21
N211E	55	100	21
NJ211E	55	100	21
NUP311E	55	120	29
NJ311E	55	120	29
N311E	55	120	29
NU311E	55	120	29
NJ2212E	60	110	28
NUP212E	60	110	22
NU212E	60	110	22
N212E	60	110	22
NJ212E	60	110	22
NJ312E	60	130	31
NUP312E	60	130	31
NU312E	60	130	31
N312E	60	130	31
NUP213E	65	120	23
NU213E	65	120	23
NJ213E	65	120	23

Bearing No.	Inner diameter d [mm]	Outer diameter d [mm]	Height B, T, H [mm]
N213E	65	120	23
NJ313E	65	140	33
NUP313E	65	140	33
NU313E	65	140	33
N313E	65	140	33
NUP214E	70	125	24
NJ2214E	70	125	31
NJ214E	70	125	24
NU214E	70	125	24
N214E	70	125	24
NJ314E	70	150	35
NUP314E	70	150	35
NU314E	70	150	35
N314E	70	150	35
NUP215E	75	130	25
NJ215E	75	130	25
NU215E	75	130	25
N215E	75	130	25
NJ315E	75	160	37
NUP315E	75	160	37
NU315E	75	160	37
N315E	75	160	37
NJ216E	80	140	26
NU216E	80	140	26
N216E	80	140	26
NUP216E	80	140	26
NUP316E	80	170	39
NJ316E	80	170	39
NU316E	80	170	39
N316E	80	170	39
NUP218E	90	160	30
NJ218E	90	160	30
N218E	90	160	30
NU218E	90	160	30
NUP318E	90	190	43

Bearing No.	Inner diameter d [mm]	Outer diameter d [mm]	Height B, T, H [mm]
NJ318E	90	190	43
NU318E	90	190	43
N318E	90	190	43
NJ219E	95	170	32
NU219E	95	170	32
N219E	95	170	32
NUP219E	95	170	32
NUP319E	95	200	45
NJ319E	95	200	45
NU319E	95	200	45
N319E	95	200	45
NUP220E	100	180	34
NJ220E	100	180	34
NU220E	100	180	34
N220E	100	180	34
NUP320E	100	215	47
NJ320E	100	215	47
N320E	100	215	47
NU320E	100	215	47
NJ221E	105	190	36
NUP221	105	190	36
NU221	105	190	36
NJ221	105	190	36
N221	105	190	36
NUP321	105	225	49
NU321	105	225	49
NJ321	105	225	49
N321	105	225	49
NJ222	110	200	38
NUP222	110	200	38
NU222	110	200	38
N222	110	200	38
N322	110	240	50
NUP322	110	240	50
NJ322	110	240	50

Bearing No.	Inner diameter d [mm]	Outer diameter d [mm]	Height B, T, H [mm]
NU322	110	240	50
NU1024	120	180	28
NJ224E	120	215	40
NUP224	120	215	40
NJ224	120	215	40
NU224	120	215	40
N224	120	215	40
NUP324	120	260	55
NJ324	120	260	55
NU324	120	260	55
N324	120	260	55
NJ2324EM	120	260	86
NU424	120	310	72
NUP226	130	230	40
NJ226	130	230	40
NU226	130	230	40
N226	130	230	40
NUP326	130	280	58
NJ326	130	280	58
NU326	130	280	58
N326	130	280	58
NCF2928V	140	190	30
NJ2228EM	140	250	68
NUP228	140	250	42
NJ228	140	250	42
NU228	140	250	42
N228	140	250	42
NJ328	140	300	62
NU328	140	300	62
N328	140	300	62
NU1030EM	150	225	35
NU230E	150	270	45
N230	150	270	45
NU2230M	150	270	73
NU330	150	320	65

Deep Groove Ball Bearing

Bearing No.	Inner diameter d [mm]	Outer diameter d [mm]	Height B, T, H [mm]
6000	10	26	8
6200	10	30	9
6300	10	35	11
6001	12	28	8
6201	12	32	10
62201	12	32	14
6301	12	37	12
6002	15	32	9
6202	15	35	11
62202	15	35	14
6302	15	42	13
61903	17	30	7
6003	17	35	10
6203	17	40	12
6303	17	47	14
6403	17	62	17
61804	20	32	7
61904	20	37	9
16004	20	42	8
6004	20	42	12
6204	20	47	14
62204	20	47	18
6304	20	52	15
6404	20	72	19
61805	25	37	7
61905	25	42	9

Bearing No.	Inner diameter d [mm]	Outer diameter d [mm]	Height B, T, H [mm]
16005	25	47	8
6005	25	47	12
6205	25	52	15
62205	25	52	18
6305	25	62	17
6405	25	80	21
61806	30	42	7
61906	30	47	9
16006	30	55	9
6006	30	55	13
6206	30	62	16
62206	30	62	20
6306	30	62	20
6406	30	90	23
16007	35	62	9
6007	35	62	14
6207	35	72	17
6307	35	80	21
6407	35	100	25
16008	40	68	9
6008	40	68	15
6208	40	80	18
6308	40	90	23
6408	40	110	27
16009	45	75	10
6009	45	75	16
6209	45	85	19
6309	45	100	25
6409	45	120	29
61910	50	72	12
16010	50	80	10
6010	50	80	16
6210	50	90	20
6310	50	110	27
6410	50	130	31

Bearing No.	Inner diameter d [mm]	Outer diameter d [mm]	Height B, T, H [mm]
16011	55	90	11
6011	55	90	18
6211	55	100	21
6311	55	120	29
6411	55	140	33
61912	60	85	13
16012	60	95	11
6012	60	95	18
6212	60	110	22
6312	60	130	31
6412	60	150	35
16013	65	100	11
6013	65	100	18
6213	65	120	23
6313	65	140	33
6413	65	160	37
6014	70	110	20
6214	70	125	24
6314	70	150	35
6414	70	180	42
16015	75	115	13
6015	75	115	20
6215	75	130	25
6315	75	160	37
6415	75	190	45
6016	80	125	22
6216	80	140	26
6316	80	170	39
6416	80	200	48
61917	85	120	18
6017	85	130	22
6217	85	150	28
6317	85	180	41
16018	90	140	16
6018	90	140	24

Bearing No.	Inner diameter d [mm]	Outer diameter d [mm]	Height B, T, H [mm]
6218	90	160	30
6318	90	190	43
61919	95	130	18
6019	95	145	24
6219	95	170	32
6319	95	200	45
6020	100	150	24
6220	100	180	34
6320	100	215	47
61821	105	130	13
6021	105	160	26
6221	105	190	36
6321	105	225	49
61822	110	140	16
6022	110	170	28
6222	110	200	38
6322	110	240	50
61924	120	165	22
16024	120	180	19
6024	120	180	28
6224	120	215	40
6324	120	260	55
61826	130	165	18
6026	130	200	33
6226	130	230	40
6326	130	280	58
16028	140	210	22
6028	140	210	33
6228	140	250	42
6328	140	300	62
61830	150	190	20
6030	150	225	35
6230	150	270	45
6330	150	320	65
6032	160	240	38

Angular Contact Ball Bearing

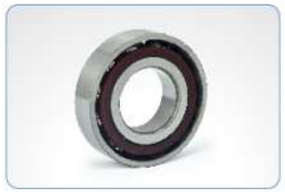
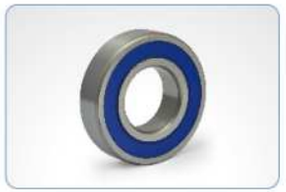

Category: Single Row

Bearing No.	Inner diameter d [mm]	Outer diameter d [mm]	Height B, T, H [mm]
7203B	17	40	12
7303B	17	47	14
7204B	20	47	14
7304B	20	52	15
7205B	25	52	15
7305B	25	62	17
7206X1B	30	62	17
7306B	30	72	19
7207B	35	72	17
7307B	35	80	21
7208B	40	80	18
7308B	40	90	23
7209B	45	85	19
7309B	45	100	25
7210B	50	90	20
7310B	50	110	27
7211B	55	100	21
7311B	55	120	29
7214B	70	125	24
7314B	70	150	35
7215B	75	130	25
7315B	75	160	37
7216B	80	140	26
7316B	80	170	39
7217B	85	150	28
7317B	85	180	41

Bearing No.	Inner diameter d [mm]	Outer diameter d [mm]	Height B, T, H [mm]
7218B	90	160	30
7318B	90	190	43
7219B	95	170	32
7319B	95	200	45
7220B	100	180	34
7320B	100	215	47

Category: Double row with filling slots

Bearing No.	Inner diameter d [mm]	Outer diameter d [mm]	Height B, T, H [mm]
3205	25	52	20
3205 2RS	25	52	20
3305	25	62	25
3206	30	62	23
3306	30	72	30
3207	35	72	27
3307	35	80	34
3208	40	80	30
3308	40	90	36
3209	45	85	30
3309	45	100	39
3210	50	90	30
3310	50	110	44
3314	70	150	63
3316	80	170	68

Category: Four - point contact

Bearing No.	Inner diameter d [mm]	Outer diameter d [mm]	Height B, T, H [mm]
QJ 208 X	40	80	22
QJ 209	45	85	19
QJ 309	45	100	25
QJ 311X	55	120	29
QBJ 55	55	120	29
QJ 1013X	65	100	18
QJ 326	130	280	58
QJ 328	140	300	62
QJ 1034	170	260	42
QJ 336	180	380	75
QJ 1044	220	340	56
QJ 344	220	460	88
QJ 1252M	260	480	90
QJ 264 N2M	320	580	92
QJ 1072	360	540	82
QJ 19/530	530	710	82
QJ 19/630	630	850	100
Q 18/670	670	820	69
QJ 19/900	900	1180	122

Self-aligning Ball Bearing

Bearing No.	Inner diameter d [mm]	Outer diameter d [mm]	Height B, T, H [mm]
1205 / 1205K	25	52	15
2205 / 2205K	25	52	18
1305 / 1305K	25	62	17
1206 / 1206K	30	62	16
2206 / 2206K	30	62	20
2306 / 2306K	30	72	27
1309 / 1309K	45	100	25
2309 / 2309K	45	100	36
2210 / 2210K	50	90	23
1310 / 1310K	50	110	27
2310 / 2310K	50	110	40
1211 / 1211K	55	100	21
2211 / 2211K	55	100	25
1311 / 1311K	55	120	29
2311 / 2311K	55	120	43
1212 / 1212K	60	110	22
2212 / 2212K	60	110	28
2218 / 2218K	90	160	40
1318 / 1318K	90	190	43
1219 / 1219K	95	170	32
2219 / 2219K	95	170	43
2319 / 2319K	95	200	67
1220 / 1220K	100	180	34

Spherical plain bearings

Bearing No.	Inner diameter d [mm]	Outer diameter d [mm]	Height B, T, H [mm]
GE15ES	15	26	12
GE20ES	20	35	16
GE25ES	25	42	20
GE30ES	30	47	22
GE30ES-2RS	30	47	22
GE35ES	35	55	25
GE35ES - 2RS	35	55	25
GE40ES	40	62	28
GE40ES - 2RS	40	62	28
GE45ES	45	68	32
GE45ES - 2RS	45	68	32
GE50ES	50	75	35
GE50ES - 2RS	50	75	35
GE60ES	60	90	44
GE60ES - 2RS	60	90	44
GE70ES	70	105	49
GE70ES - 2RS	70	105	49
GE80ES	80	120	55
GE80ES - 2RS	80	120	55
GE90ES	90	130	60
GE90ES - 2RS	90	130	60
GE100ES	100	150	70
GE100ES - 2RS	100	150	70
GE110ES	110	160	70
GE110ES - 2RS	110	160	70
GE120ES	120	180	85

Spherical roller bearings

Bearing No.	Inner diameter d [mm]	Outer diameter d [mm]	Height B, T, H [mm]
21304CA	20	52	15
22205CA	25	52	18
21305CA	25	62	17
22206CA	30	62	20
21306CA	30	72	19
21307CA	35	80	21
22214CA	70	125	31
21314CA	70	150	35
21314CAK	70	150	35
22314CA	70	150	51
21315CA	75	160	37
22315CA	75	160	55
21317CAK	85	180	41
22317CA	85	180	60
22218CA	90	160	40
23218CA	90	160	52.4
22319CA	95	200	67
23120CA	100	165	52
23120CAK	100	165	52
22220CA	100	180	46
23220CA	100	180	60.3
21320CA	100	215	47
21320CAK	100	215	47
22320CA	100	215	73
23022CA	110	170	45
23022CAK	110	170	45

Bearing No.	Inner diameter d [mm]	Outer diameter d [mm]	Height B, T, H [mm]
24024CA	120	180	60
23124CA	120	200	62
24124CA	120	200	80
22224CA	120	215	58
23224CA	120	215	76
23224CAK	120	215	76
22324CA	120	260	86
23026CA	130	200	52
24026CA	130	200	69
23126CA	130	210	64
24126CA	130	210	80
24126CAK	130	210	80
22226CA	130	230	64
23226CA	130	230	80
22326CA	130	280	93
23028CA	140	210	53
24028CA	140	210	69
23128CA	140	225	68
24128CA	140	225	85
22228CA	140	250	68
23032CAK	160	240	60
24032CA	160	240	80
23132CA	160	270	86
22232CA	160	290	80
23232CA	160	290	104
24038CA	190	290	100
23138CA	190	320	104
23138CAK	190	320	104
24138CA	190	320	128
24138CAK	190	320	128
22238CA	190	340	92
23238CA	190	340	120
23238CAK	190	340	120
22338MB	190	400	132
22338MBK	190	400	132

Bearing No.	Inner diameter d [mm]	Outer diameter d [mm]	Height B, T, H [mm]
22244CA	220	400	108
22244CAK	220	400	108
22244MB	220	400	108
22244MBK	220	400	108
23244CA	220	400	144
23244CAK	220	400	144
22344CA	220	460	145
22344CAK	220	460	145
22344MB	220	460	145
22344MBK	220	460	145
23048MB	240	360	92
23048MBK	240	360	92
22248CA	240	440	120
22248CAK	240	440	120
22348CA	240	500	155
22348CAK	240	500	155
23052MB	260	400	104
23052MBK	260	400	104
24052CA	260	400	140
24052CAK	260	400	140
23152CA	260	440	144
22252MB	260	480	130
22252MBK	260	480	130
23252CA	260	480	174
23056CA	280	420	106
23964CA	320	440	90
23064CA	320	480	121
23164CA	320	540	176
23068CA	340	520	133
23268CA	340	620	224
23172CA	360	600	192
23272MB	360	650	232
23980CA	400	540	106
23280CA	400	720	256
23088CA	440	650	157

The goods We offer to you